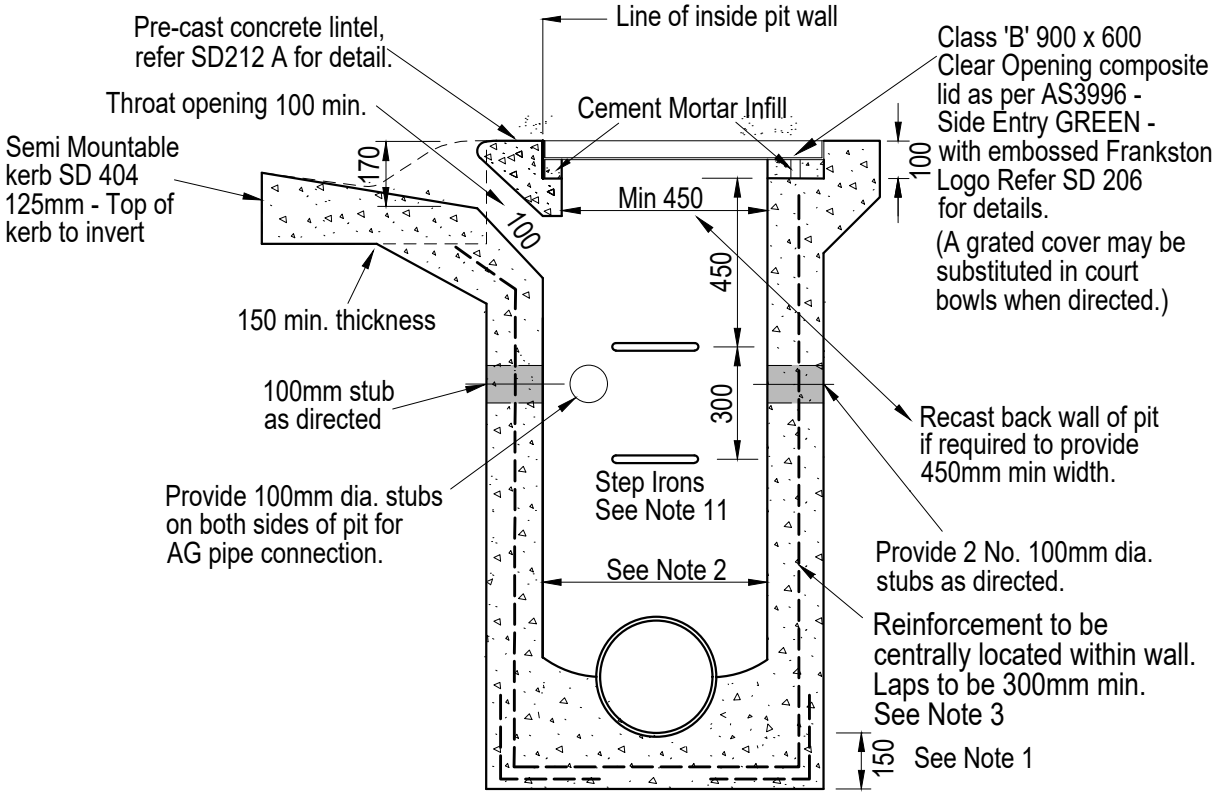

SECTION A-A

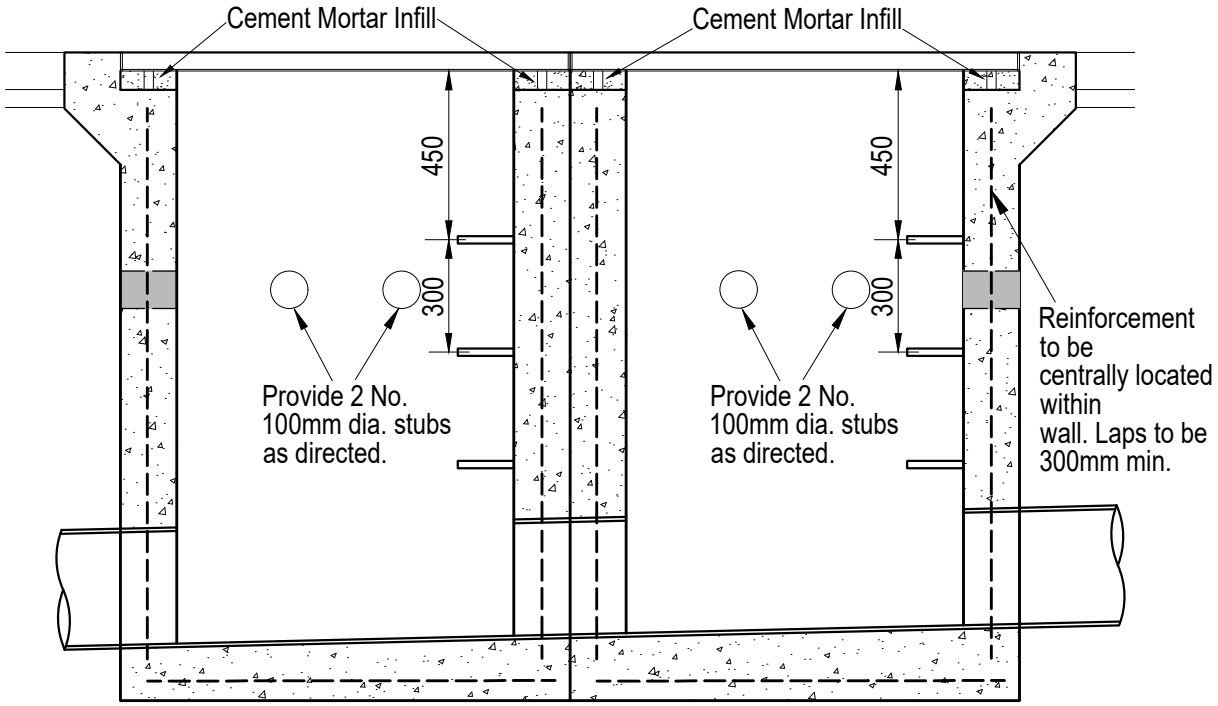

SECTION B-B

Frankston City	SCALE: 1 : 20	DATE: Dec 2025	APPROVED: MANAGER ENGINEERING SERVICES
	DRAWN: R.J.	CHECKED: T.T.	
	DOUBLE SIDE ENTRY PIT TYPE 2 - SEMI-MOUNTABLE KERB (125mm top of kerb to invert)		LAST AMENDED: Jan 2026 SD 220C PAGE 2 OF 2